ALECO
E·S·ROBBINS
2720 East Avalon Avenue Muscle Shoals, AL 35661
Phone: 1-800-633-3120 • Fax: 1-800-750-9616 • Email: info@aleco.com

ImpacDor® AIS-175

NUMBER OF PAIRS:

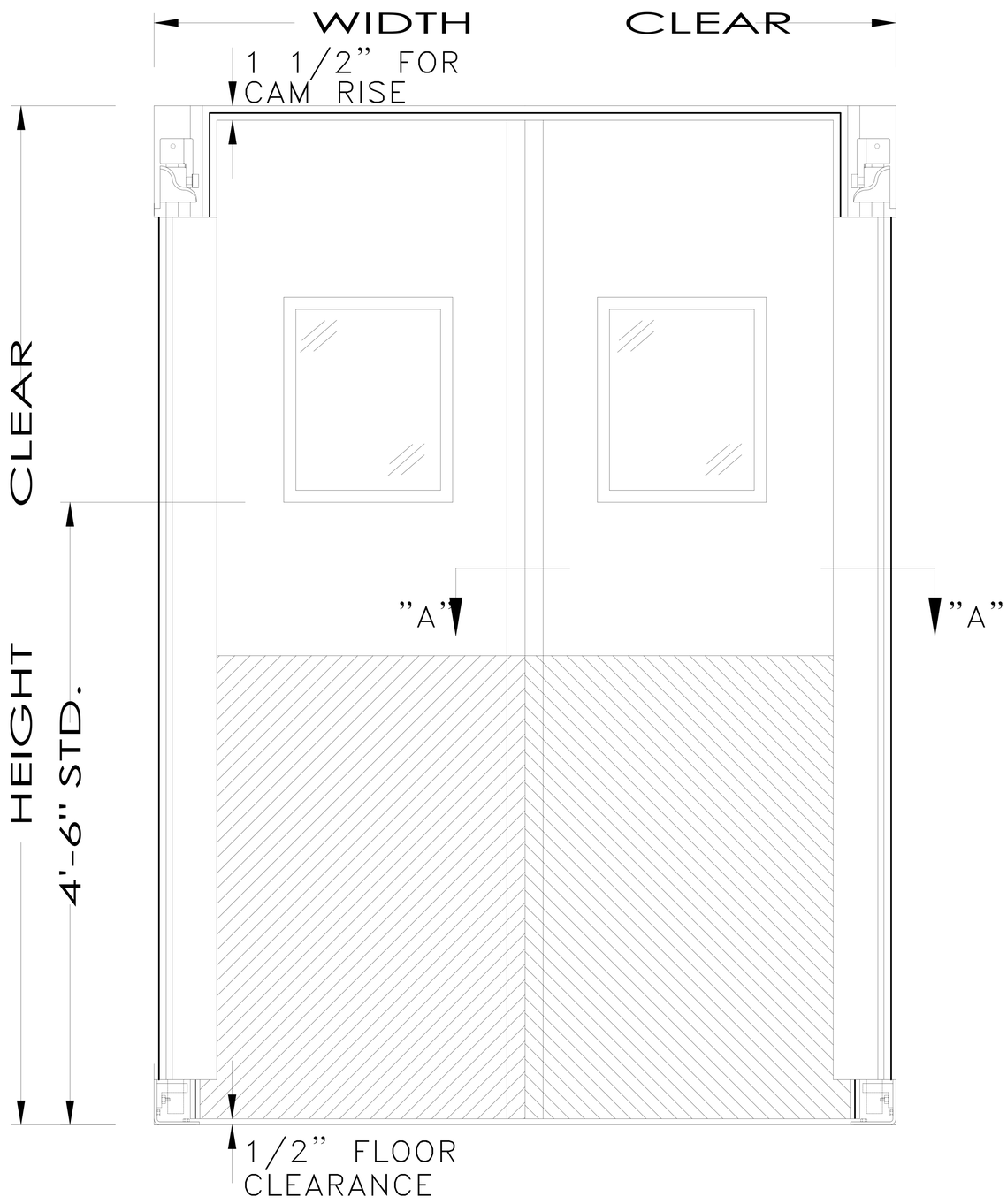

ELEVATION OF DOORS

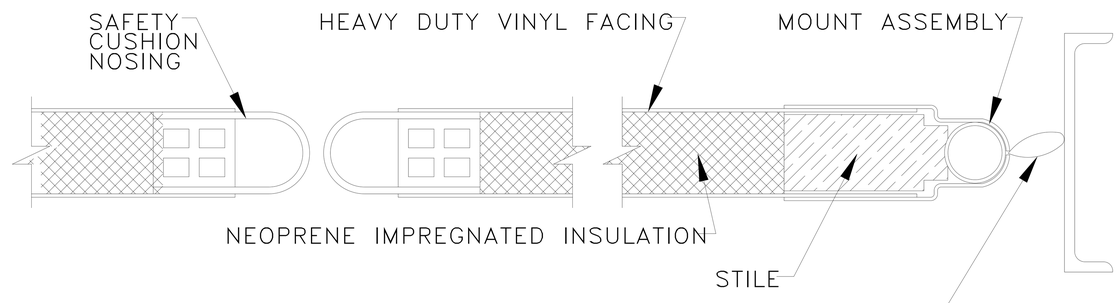

SECTION "AA"

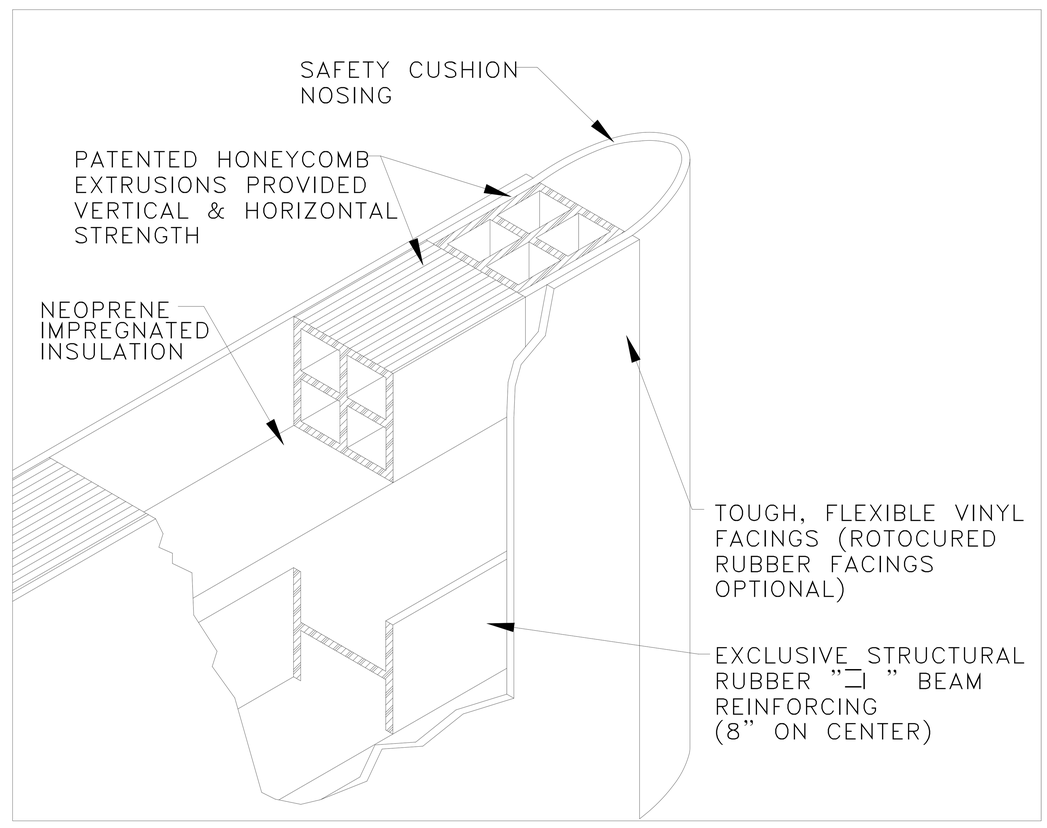

INTERNAL CONSTRUCTION

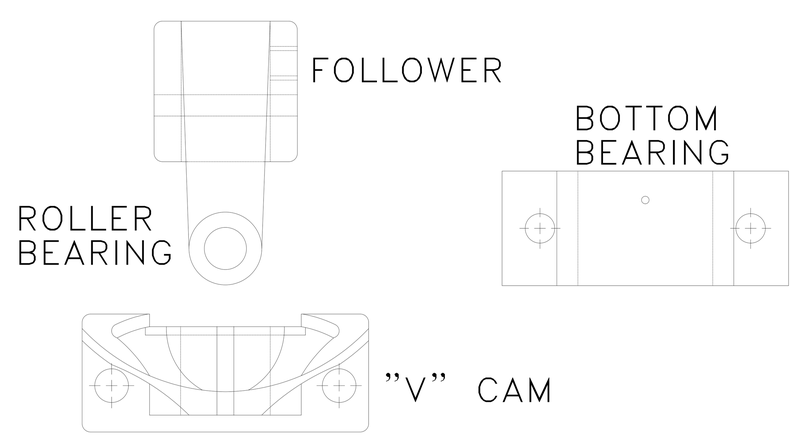

V-CAM HARDWARE 90° X 90°
(1 1/2" RISE IS STANDARD)
WHERE REQUIRED, SPECIFY ALTERNATE RISE CAM
DEEP SEAT CAM [ ]
CAM HARDWARE FACTORY ALIGNED AND PREPINNED.
USE MOUNTING GUIDE FOR PROPER INSTALLATION

STANDARD FEATURES

- FULLY INSULATED, 1 13/16" OVERALL DOOR THICKNESS
- 14" X 16" RECTANGULAR VISION PANEL EACH LEAF
- FULL PERIMETER SEALS
- 48" HIGH POLYETHYLENE IMPACT PANELS
- SAFETY CUSHION NOSING
- MANUFACTURED TO FIT OPENING (+0",-1/8" TOLERANCE)
- 1 1/2" RISE V-CAM HARDWARE, ZINC PLATED
- HOLD OPEN PIN

OPTIONS

TEAR-DROP BUMPERS - (MOLDED POLYETHYLENE)
HEIGHT 12"[ ] 24"[ ] OTHER [ ]
36"[ ] 48"[ ] _____
WIDTH 24"[ ] 42"[ ]

CAM SWING (90° X 90° - STANDARD)
90° X 125°.....[ ] 90° X 180°.....[ ]

IMPACT PANELS - 24" HIGH.....[ ]

[ ] JAMB GUARDS: 8 3/4" HIGH X 3" DEEP (1/4" STEEL), ZINC PLATED

WASH DOWN PACKAGE:
[ ] TEFLON COATED HARDWARE

WINDOWS (DUAL PANE):
POLYCARBONATE - 1/8" THICK, FLUSH MOUNTED:

14" x 16" [STD]
16" x 18" [ ]
24" x 24" [ ]

"C" FRAME (WASH DOWN APPLICATIONS)
- 1/4" SINGLE PANE.....[ ]

FOR PRESSURE AND WIND LOADS:
[ ] ADJUSTABLE SPRING COMPENSATOR
[ ] COMPRESSION SPRING